PAVO (LYON) BUNK BED

IMPORTANT - READ CAREFULLY - RETAIN FOR FUTURE REFERENCE

Tools Needed

Two persons required
Cross head screwdriver

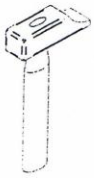

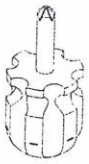

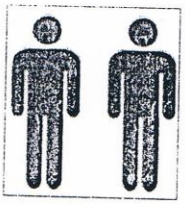

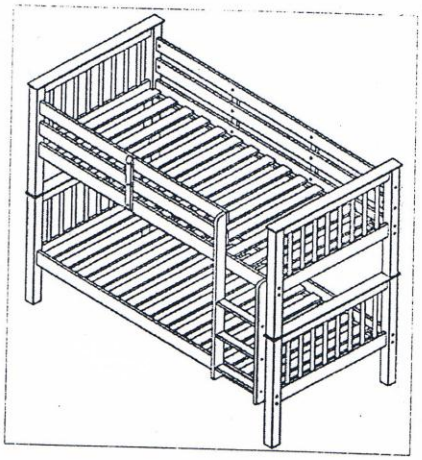

Help line

If you have any problems with this product or require any replacement parts please contact customer service Tel 00 44 01455 850150

Regrettably self assembly items cannot be returned once assembly is part or fully completed unless the items are found to be faulty.Should you need to return the unassembled product,please repack in its original packaging.

Important

- We suggest you spend a short time reading this leaflet and then follow the simple step-by-step instruction. Carefully check that you have all the parts before beginning assembly.
- Keep fittings out of children's reach and keep children well away from the construction area.
- We suggest you retain the instructions for future reference.
- A minimum of 2 persons is required to assemble this product.
- We recommend that the packaging is used to protect the surfaces during assembly.

Product Information

- This product is made from New-Zealand Pine wood with a painted finish.
- Natural features ensure that each piece is individual to you. Every effort is made to ensure colour continuity between pieces, however this is a natural product, slight colour variations and natural markings may occur.
- Made in Vietnam
- This item complies with BS EN:747:2007

Care Instructions

- Do not rub or scrub the surface when cleaning.
- Ensure the product is protected with mats and coasters when items are placed on its surface, to prevent scratching or damage. Do not put hot dishes directly onto wooden surfaces.
- Avoid keeping the furniture in direct sunlight or close to any heat source as this can cause cracking, discolouration or warping.
- Never drag the piece across the floor as this could cause damage to the joints.
- Periodically check all fixings and tighten if necessary.
- Wood will mellow and change colour over time, we recommend that ornaments are moved regularly to prevent uneven mellowing.

Components parts and fittings contained in the box

Please sort out all parts before you begin to assemble the item.
This to make sure you always use the correct part.

Fittings

H1 — 22 pcs FLAT HEAD ALLEN SCREW Ø 4 x 125mm	H2 — 22 pcs BARREL NUT Ø 4 x 13mm	H3 — 9 pcs FLAT HEAD ALLEN SCREW Ø4 x 30
H4 — 60 pcs SCREW Ø 4 x 30mm	H5 — 4 pcs 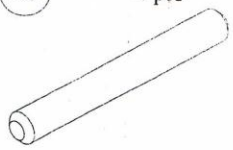 WOODEN DOWEL Ø 12 x 90mm	H6 — 6 pcs FLAT HEAD ALLEN SCREW Ø4 x 45mm
H7 — 6 pcs FLAT HEAD ALLEN SCREW Ø6.3x 50mm	H8 — 12 pcs FLAT HEAD ALLEN SCREW Ø 4x 70mm	H9 — 1 pc ALLEN KEY 4mm
H10 — 8 pcs SCREW Ø 4 x 35mm	H11 — 52pcs 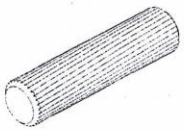 WOODEN DOWEL Ø 10 x 40mm	

WARNING !

Keep small components out of the reach of children

Parts :

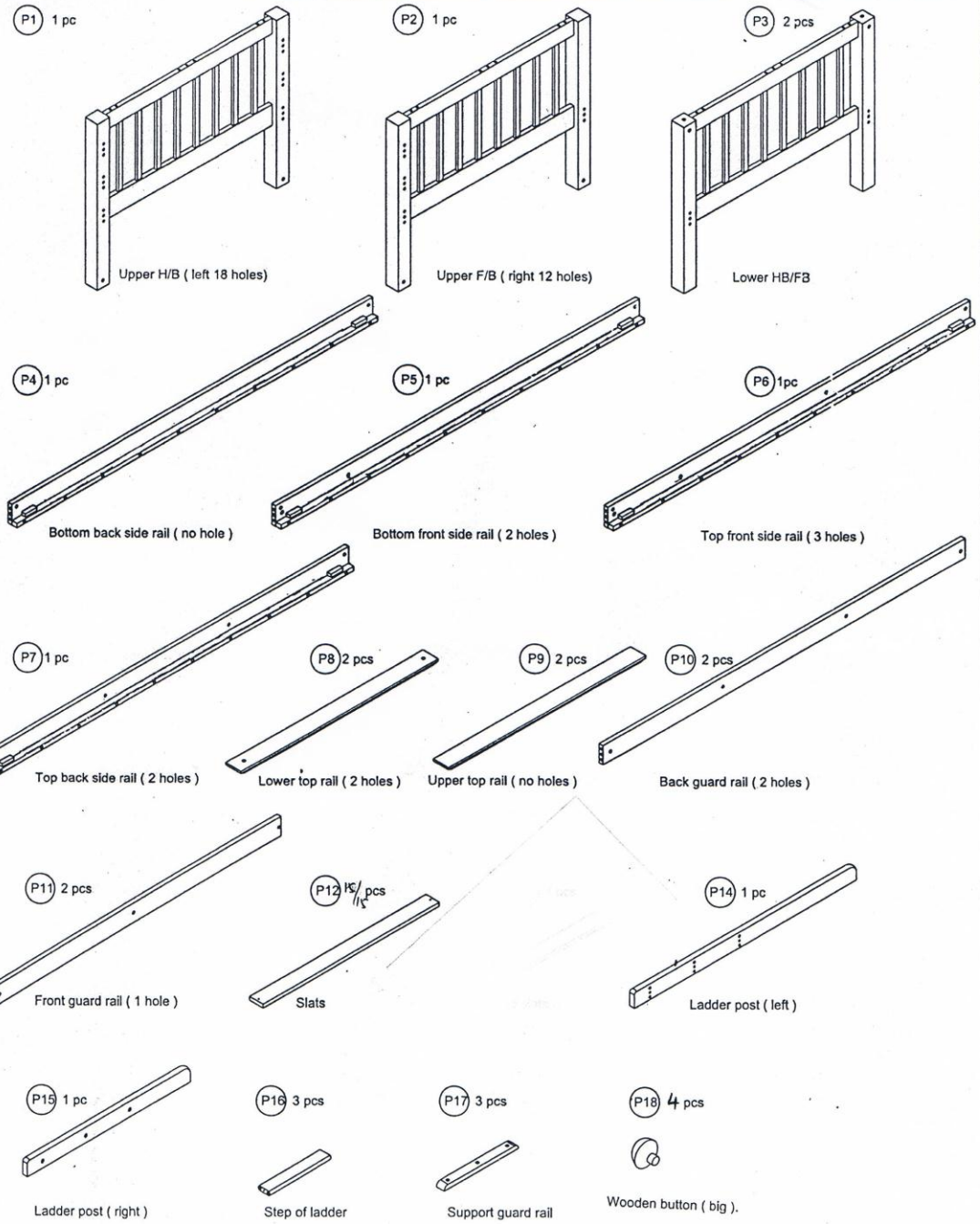

STEP ONE

Attach wooden dowels in bottom back side rails (P4) and (P5) as picture.

Attach lower HB/FB (P3) with and bottom back side rails (no hole) (P4) and bottom front side rail (2 holes) (P5).

Tighten with flat head allen screws (H1) and barrel nut (H2) by allen key (H10).

Use 8pcs wooden buttons (P18) to attach in holes.

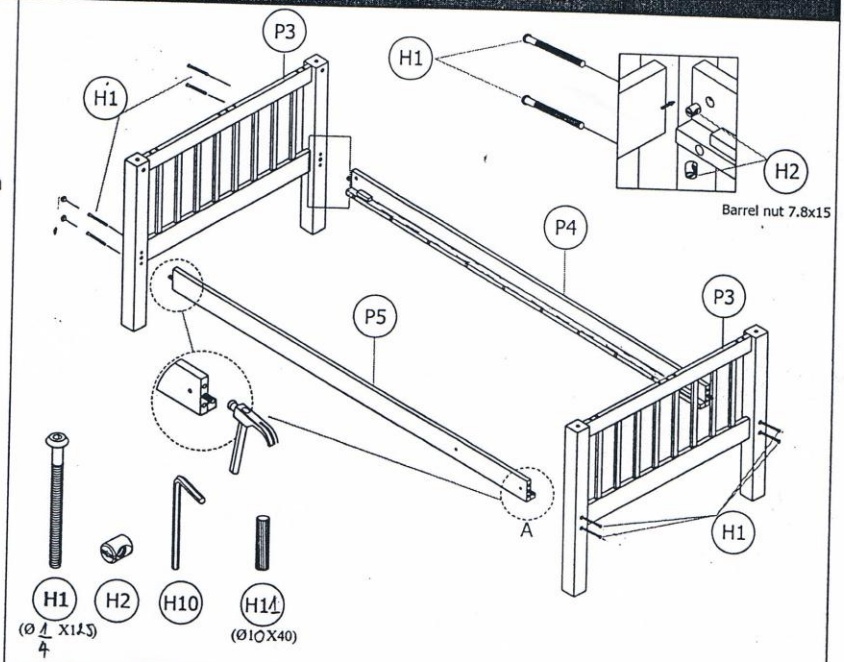

STEP TWO

Attach lower top rails (P8) with lower HB/FB.

Use wooden dowels (H11) and flat head allen (H8) to link them together as picture.

Put the 4pcs wooden dowel (H5) into holes link top bed.

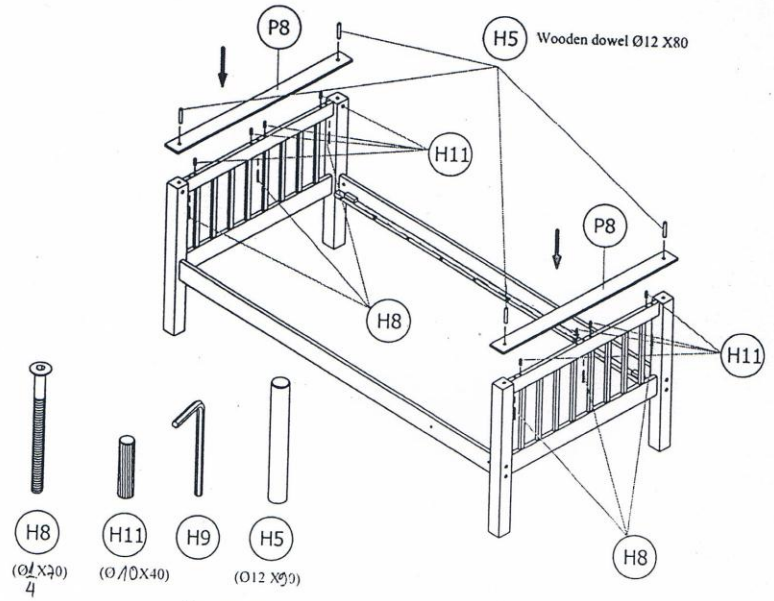

STEP THREE

Attach upper H/B (P1) and upper F/B (P2) as picture.

Attach upper top rails (P9) with upper HB / FB.

Use wooden dowel (H11) and flat head allen (H8) to link them together as picture.

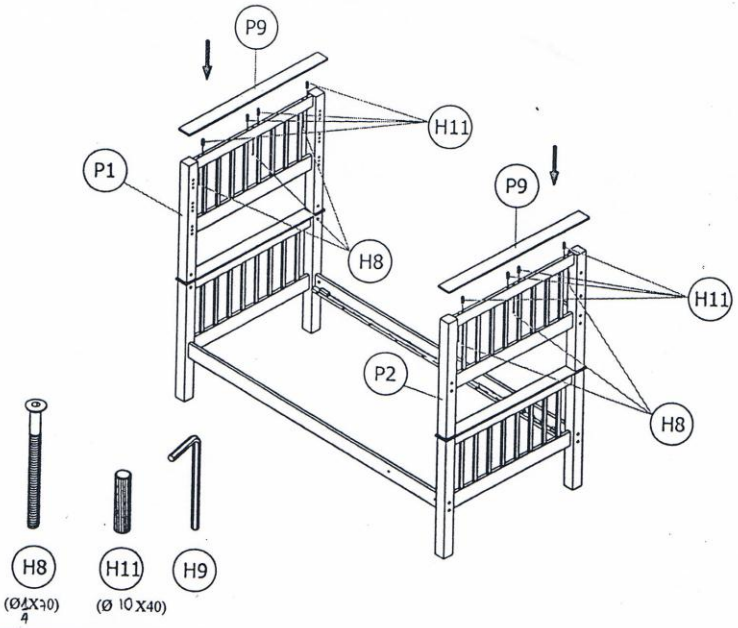

STEP FOUR

Attach wooden dowel as picture.

Attach top front side rail (P6) and top back side rail (P7) and use flat head allen screws (H1).

Do not tighten these until instruction to case assembly...

Attach back guard rails (P10) and use flat head allen screws (H1).

Do not tighten these until instruction to case assembly.

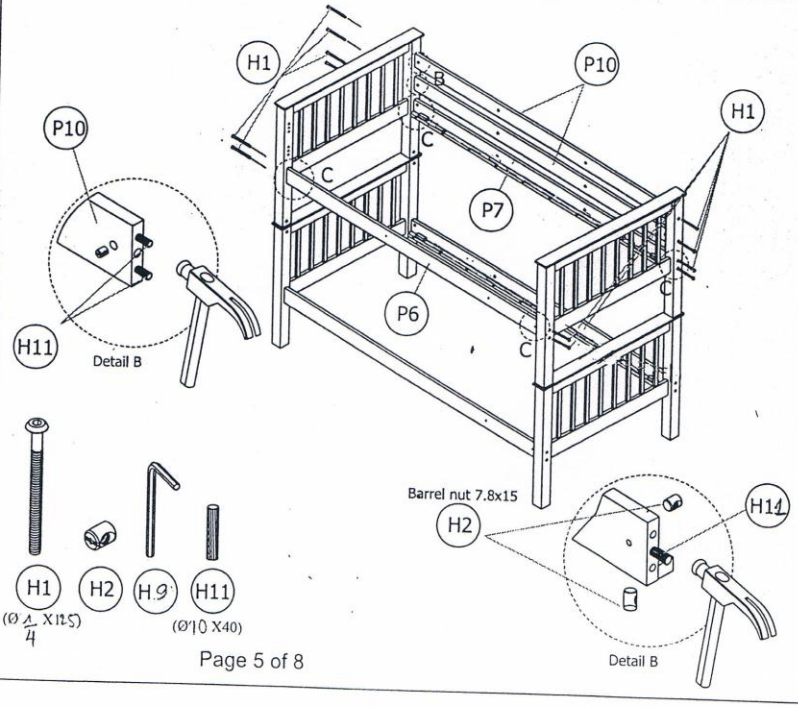

STEP FIVE

Attach wooden dowels (H11) as picture.

Attach ladder post (P14) and (P15) with step of ladder (P16)

Use flat head allen screws (H7) to link them together tightening with allen key (H9).

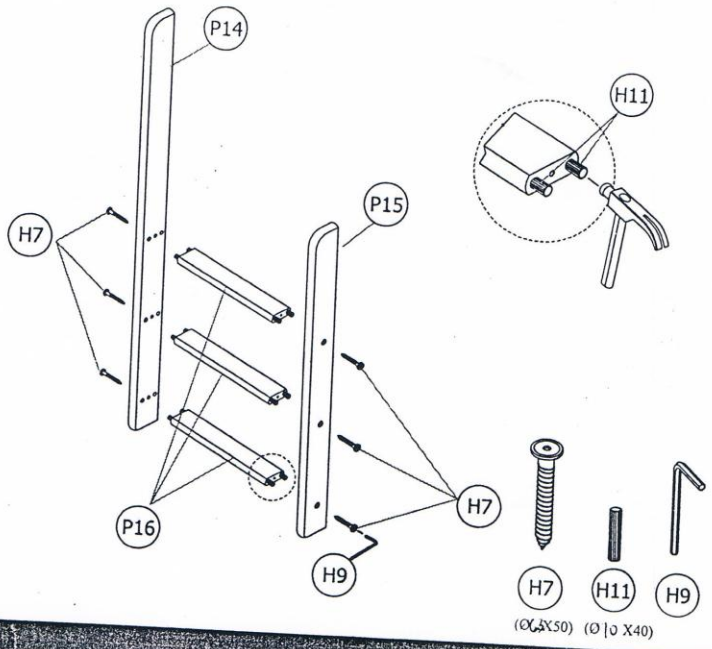

STEP SIX

Attach ladder with the bed as picture.

Use flat head allen screws (H6) to tighten them.

Tighten screws (H13) by screwdriver as picture.

Use 8pcs wooden butons (P18) to attach in holes.

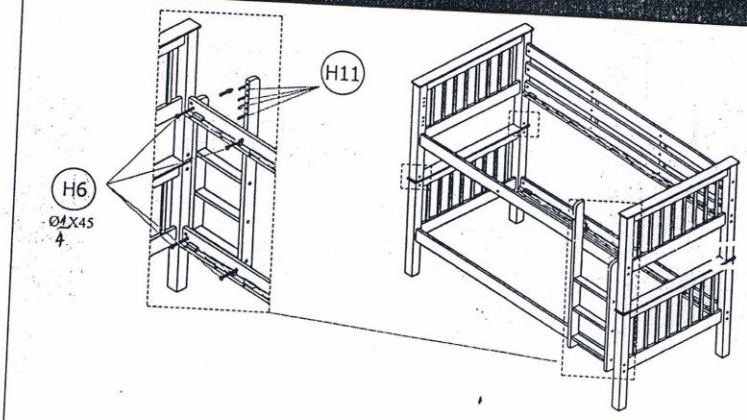

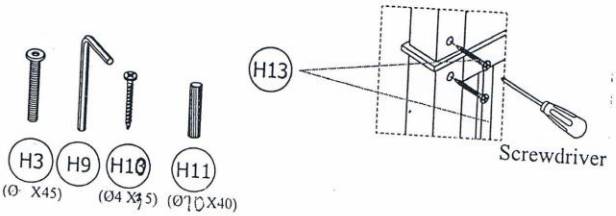

STEP SEVEN

- Attaching front guard rails (P11) using flat head allen screws (H1)and (H6).

Attach support guard rails (P17) using flat head allen screws (H3).

Tighten all screws.

Use 11pcs wooden buttons (P18) to attach in holes.

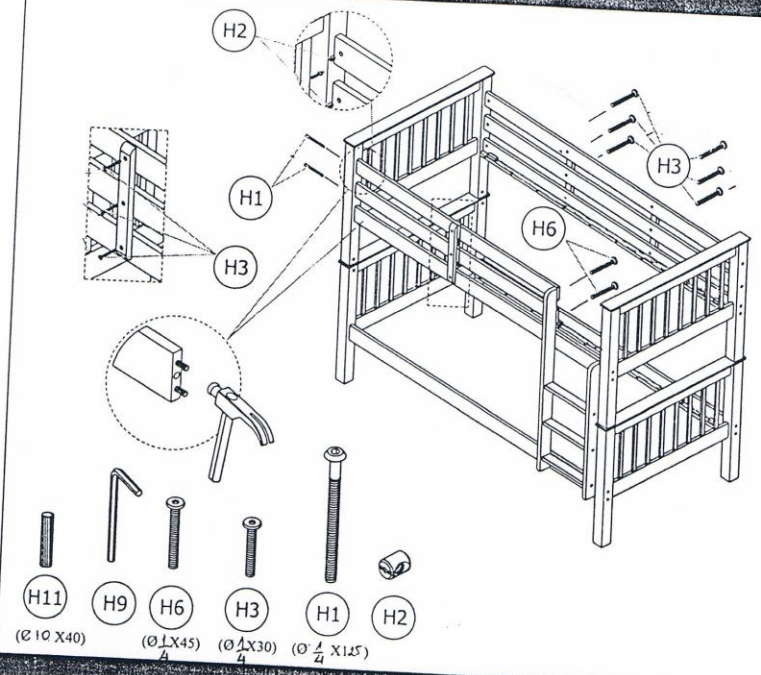

STEP EIGHT

Fix the 4pcs end slats (P13) and 26pcs slats (P12) as picture.

Use screws (H4) and screwdriver tighten all slats.

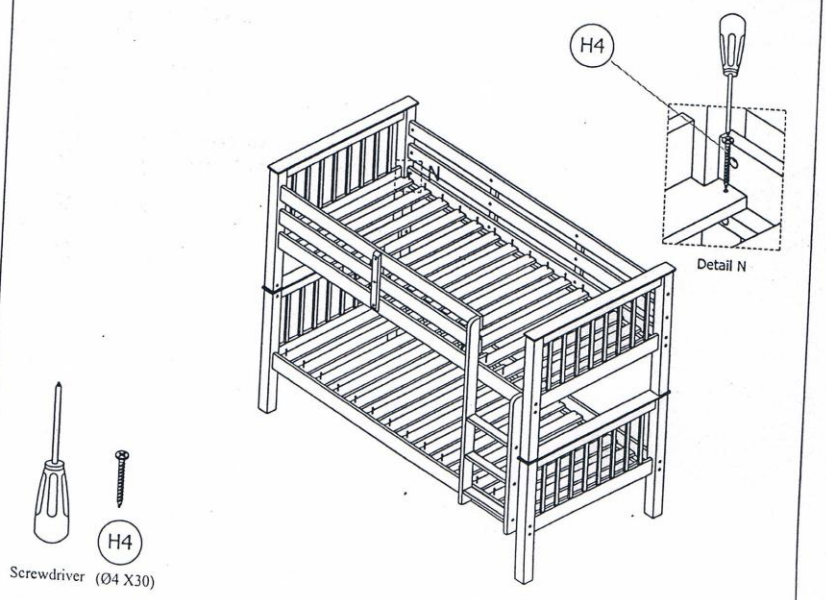

PAVO BUNK

PLEASE NOTE THAT THERE HAS BEEN A CHANGE TO THE PART NUMBER LABELLING
ON THE RAILS –

P6 - SHOULD BE P7 – TOP BACK SIDERAIL (2 HOLES)

P7 – SHOULD BE P6 – TOP FRONT SIDERAIL (3 HOLES)